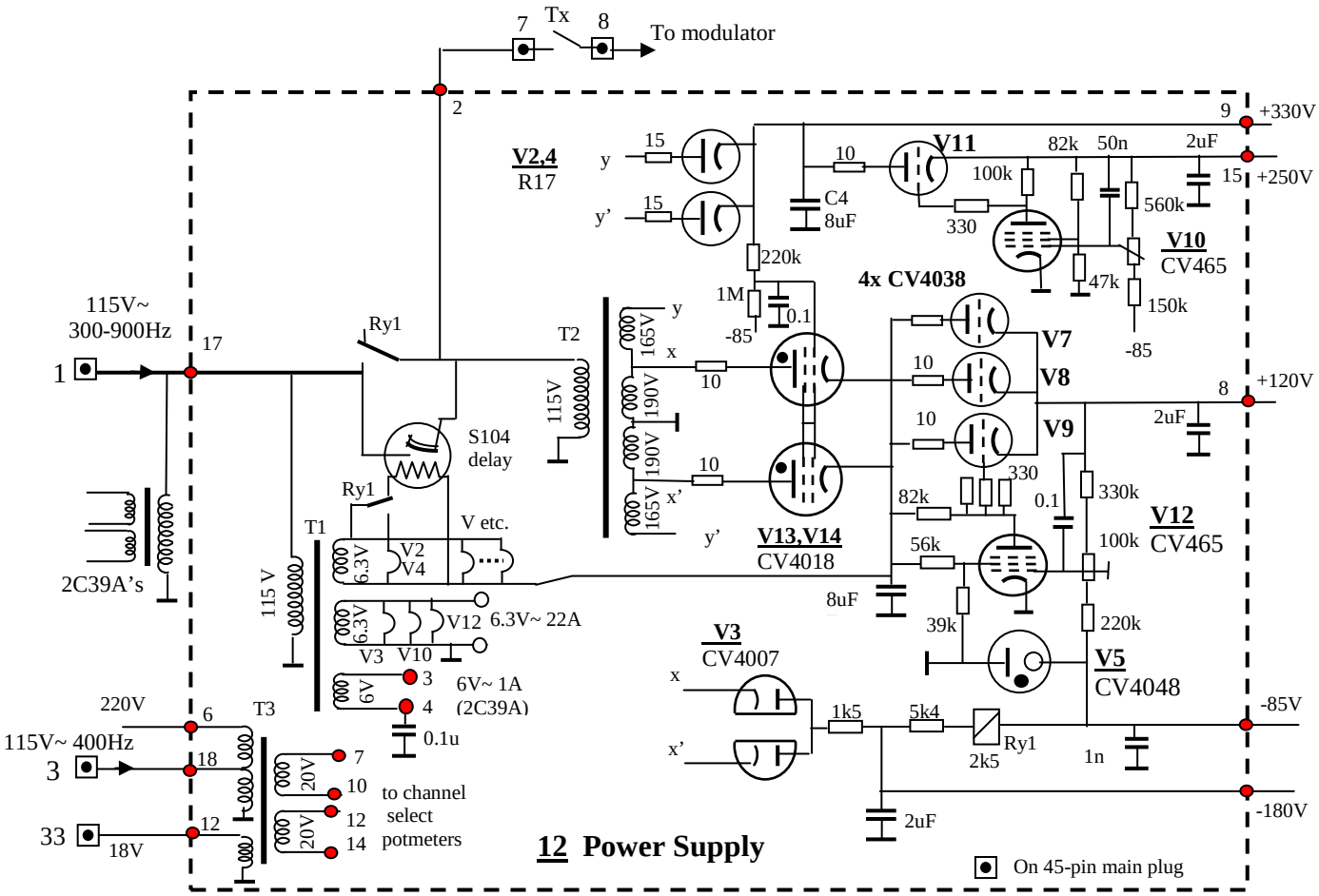

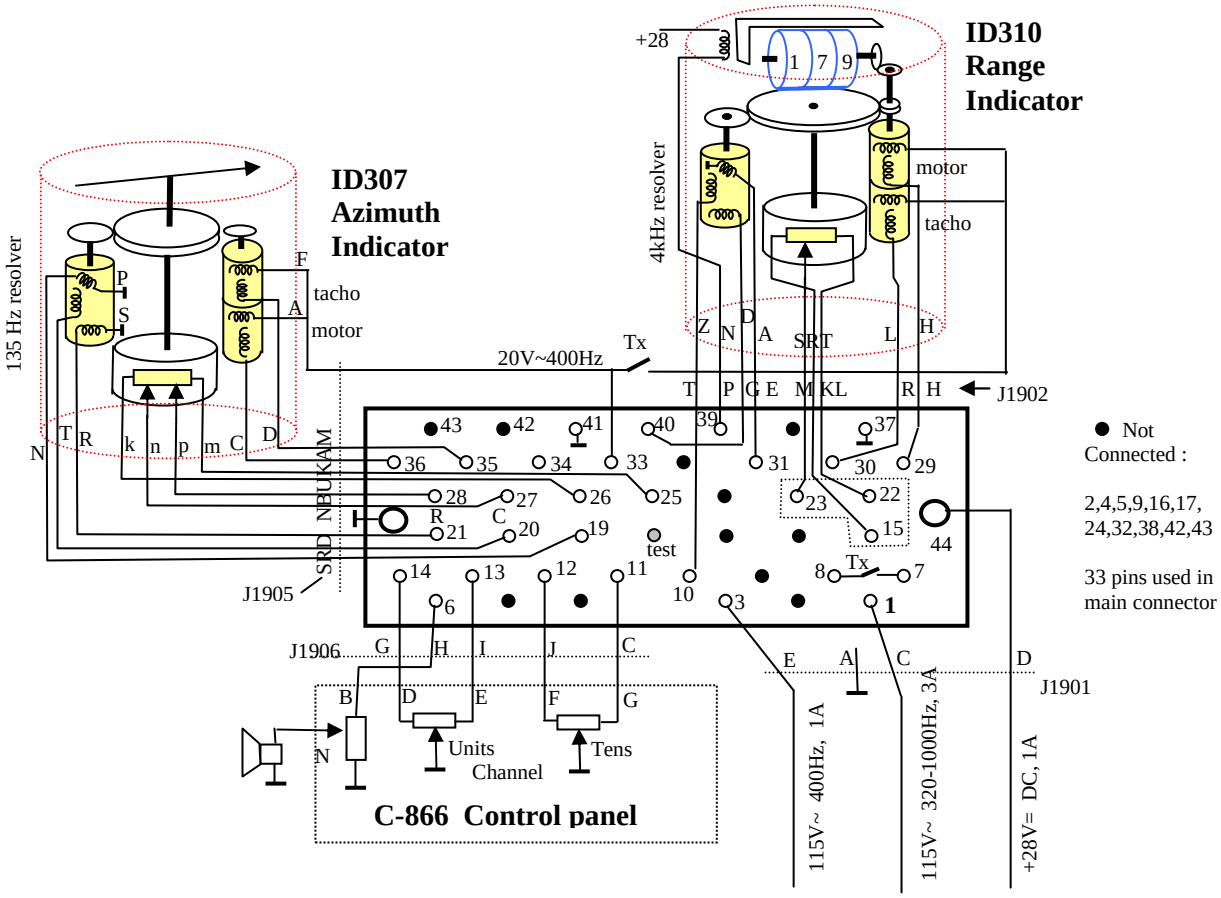

STARN-21 Power Supply and interface

June 2007