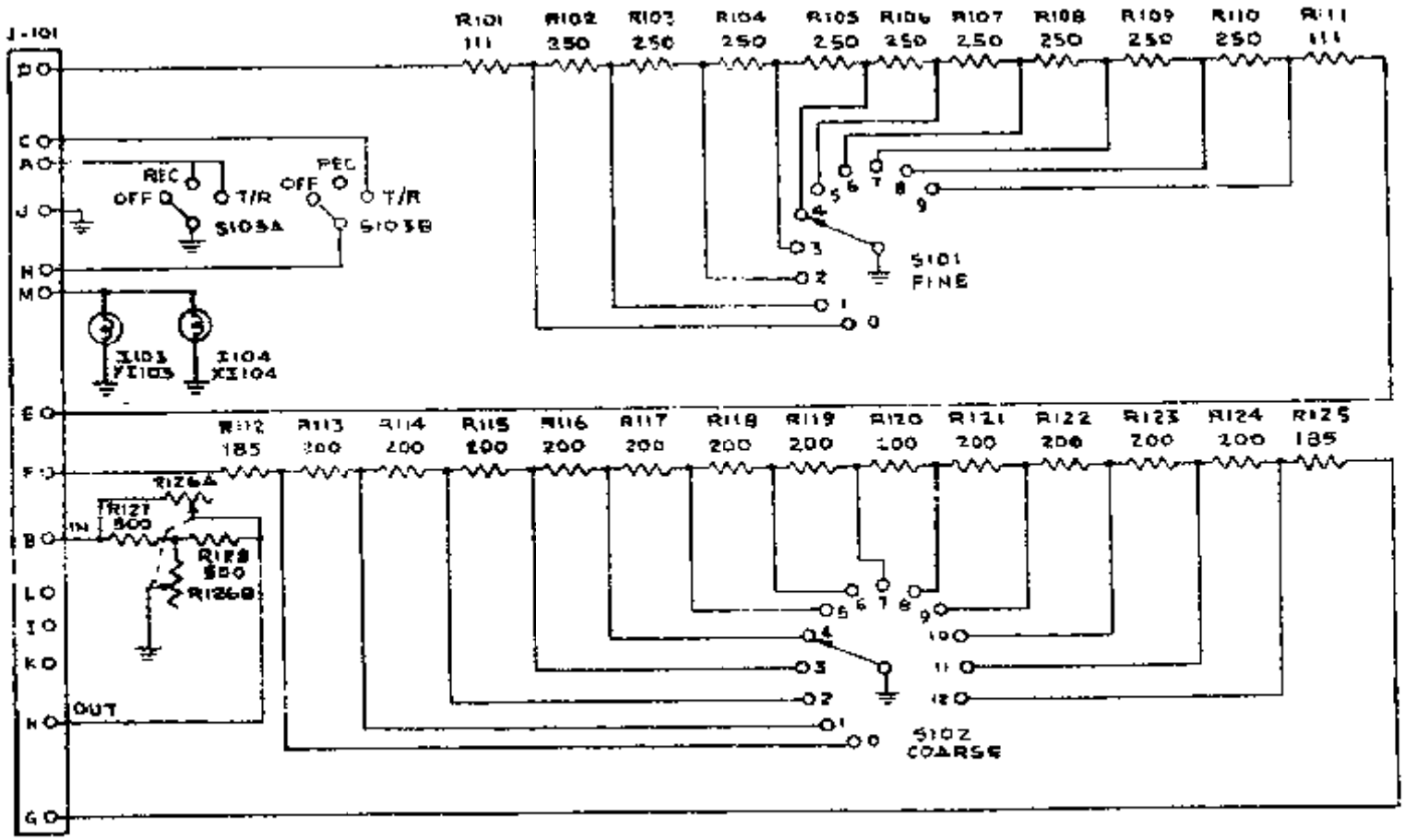

FIGURE 1 SCHEMATIC DIAGRAM - C-1763/ARN-21A

NOTE:
R101 THROUGH R125
TO BE ± 1%